Energétique avancée

Process integration and exergy analysis

Dr Francois Marechal

7. Heat exchanger network simulation and optimization

Goals

Short summary

7. Heat Exchanger Network Simulation and Optimization..... 2

7.1. Rating equation taking into account the fluid phase changes..... 3

7.2. Heat transfer coefficient..... 5

7.3. Pressures..... 6

8. The retrofit or the revamping problem..... 7

Calcul d'un échangeur de chaleur⊡ annexe 12

Objectifs.....12

Développement théorique.....12

7. Heat Exchanger Network Simulation and Optimization

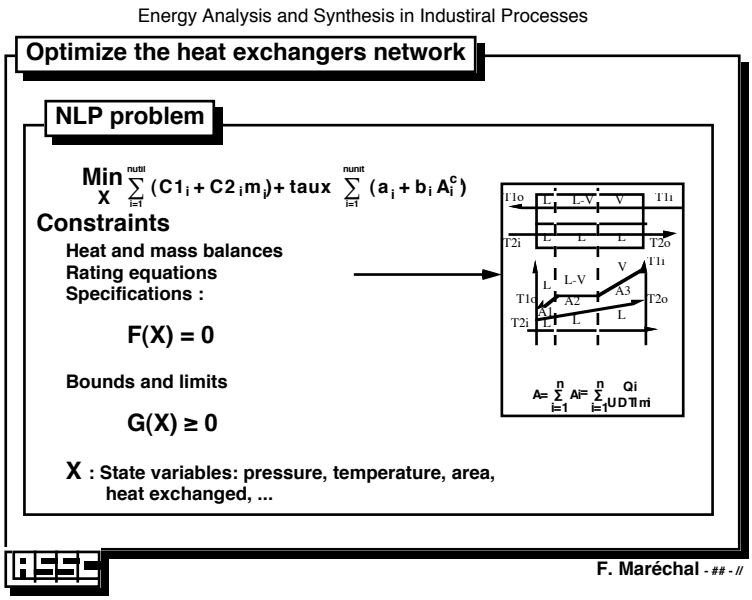

The initial structures obtained from the previous steps are optimized. The objective function (35) is the total cost including investment and energy.

$$C = \sum_{i=1}^{nu} ki\ fi + \sum_{j=1}^{nhtx} (aj + bj\ (Aj)^{cj}) \qquad (35)$$

Where	nu	is the number of utility streams.
	fi	is the flow rate of the utility i.
	ki	is the cost of the utility i.
	t	is the rate of return of the investment.
	nhtx	is the number of heat exchanger in the network.
	Aj	is the area of the heat exchanger j.
	$aj + bj\ (Aj)^{cj}$	is the cost function of the exchanger j.

The problem formulation takes into account different types of constraints to be solved simultaneously, such as thermal and material balances, rating equations, bypass calculation for retrofit or flexibility study, flow rate dependent heat transfer coefficient, bounds on flow rates, temperatures, area or load, special equality constraints, etc.

The equation solver formulation of the problem allows to solve easily each kind of task: simulation of existing networks, retrofit, revamping, flexibility analysis, grassroots design, etc.

The presentation of the equation solver formulation for the heat exchanger network simulation and optimization is out of the scope of this presentation. We just present here the principles of the heat exchanger simulation model. The heat exchanger model includes

material and thermal balances and a rating equation for simulating its performances and the cost function. If the simulation model has to be sufficiently complex for representing the reality, it must be simple enough to allow the optimization calculation.

The heat exchanger model features the following characteristics.

7.1. Rating equation taking into account the fluid phase changes.

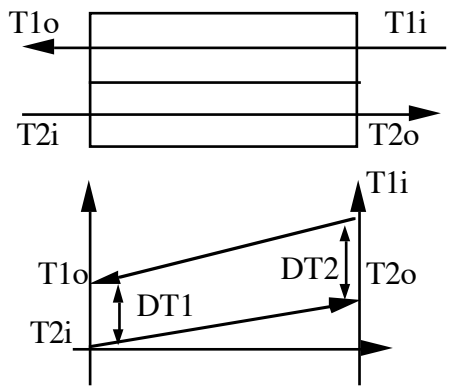

Figure 84. Counter current heat exchanger network.

The rating equation of the counter current heat exchanger of figure 84 is given by (36).

$$Q = UA\ DTlm \tag{36}$$

Where

Q is the heat exchanger heat load.
U is the heat transfer coefficient.
A is the area of the heat exchanger.
DTlm is the logarithmic mean of the temperature differences given by (37)

$$DTlm = \frac{DT1 - DT2}{\ln\left(\frac{DT1}{DT2}\right)} \tag{37}$$

The latter formulation comes from the integration of the expression (38) defining the heat transfer on an infinitesimal area dA (figure 85).

$$dQ = U \bullet dA \bullet (Th - Tc)$$

Where
- dQ is the heat load exchanged between the hot and cold streams.
- dA is the infinitesimal area.
- Th and Tc are the temperatures of respectively the hot and cold streams.
- $(Th - Tc)$ is the driving force.

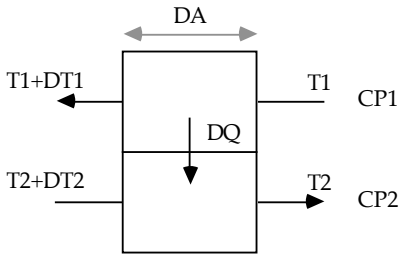

Figure 85. Heat transfer equation.

The rating equation is obtained by integrating the expression on the exchanger area (34).

$$\int_1^2 \frac{dQ}{(Th - Tc)} = UA \qquad (39)$$

Using the thermal balances in the interval dA and assuming constant Cp, the solution of the equation (39) is the expression (36).

Note that for DT1= DT2 the expression of the DTlm (37) degenerates into DTlm = DT1. The constant Cp assumption is no more valid when fluid phase changes occur. To solve the integration in this case, we have to consider the H-T diagram of the stream with fluid phase changes. It will be decomposed in three successive linear sections with constant Cp value. The heat exchanger (figure 86) will be calculated by a sum of linear section integration by (40).

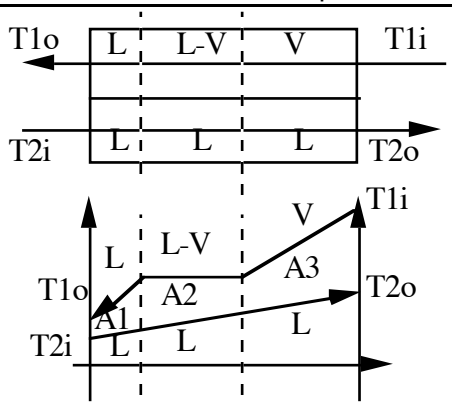

Figure86. Fluid phase changes exchanger

$$A = \sum A_i = \sum \frac{Q_i}{U_i DTlm_i} \quad (40)$$

Where

Q_i is the heat load of the linear section i.
U_i is the heat transfer coefficient of the section i.
A is the total area of the heat exchanger.
A_i is the area of the linear section i.
$DTlm_i$ is the logarithmic mean of the temperature difference given by (41).

$$DTlm_i = \frac{DT1_i - DT2_i}{\ln\left(\frac{DT1_i}{DT2_i}\right)} \quad (41)$$

For the resolution method, such a formulation will induce problem of convergence because of the discontinuities. The formulation has to be modified to smooth the discontinuities. We will not describe here the way of reformulating the equation to cope with this problem.

7.2. Heat transfer coefficient.

The heat transfer coefficient depends on the streams which exchange and of the internal structure of the exchanger. The heat transfer coefficient correlations are available to calculate the value of the film heat transfer coefficient. They can not be introduced in the former formulation, but the influence of the flow rate on the film heat transfer coefficient can be added (42).

$$\frac{h}{h0} = \left(\frac{f}{f0}\right)^{0.6} \quad (42)$$

Where
- h is the film heat transfer coefficient
- h0 is the reference film heat transfer coefficient
- f is the flow rate of the stream
- f0 is the reference flow rate for which h0 is calculated.

7.3. Pressures

The model presented here above assumes isobar exchange. The calculation pressure is the outlet pressure. Nevertheless, the pressure drops can be calculated as a function of the flow rate with a similar expression as the film heat transfer coefficient (43).

$$\frac{DP}{DP0} = \left(\frac{f}{f0}\right)^{2} \quad (43)$$

Where
- DP is the pressure drop
- DP0 is the reference pressure drop
- f is the flow rate of the stream
- f0 is the reference flow rate for which DP0 is calculated.

When solving the minimization problem, DTmin and MER constraints are obviously relaxed. The two sub systems are treated simultaneously during the optimization procedure.

If any exchanger is economically useless, it will be suppressed in the optimization phase. It will thus be possible to find networks featuring a number of exchangers smaller than the expected Umin,mer. Indeed, downstream path and loop breaking can be automatically assessed by optimization.

Step 7: Network choice and sensitivity analysis.

As more than one network can be found in solving the previous steps of the methodology. We will choose the optimal network in the set of the cost optimal HEN. Flexibility and reliability considerations will direct the selection. Using the "equation solver" formulation we can calculate sensitivity matrices and the decoupling matrix to study control strategy. The calculation of these matrices is described in Kalitventzeff (1988). We can use it to calculate fouling influence, to choose manipulated variables, pair these with controlled ones and calculate the decoupling strategy. The integration to the process can also be evaluated at this stage, to study the optimal management of the system: "What will be the influence of shutting down a part of the installation for maintenance, of changing production levels?" This work can be performed with the optimization program at fixed heat exchanger area, calculating bypass value and utility flow rates to obtain the new optimal operating set point.

The simulation models have to be sufficiently complex to give meaningful results, but also simple enough to allow optimization or simulation solution at an acceptable computer cost. One can use more sophisticated models to perform better rating and costing.

8. The retrofit or the revamping problem

The retrofit of a heat exchanger network or a chemical plant consists of modifying the structure or the set points to improve the global economic efficiency of the process. The investment required for these modifications must be small enough compared to the economic gain. Indeed, the rate of return of the investment must be acceptable.

Retrofit is the most common problem to be solved by the engineer but general methods to solve the problem are not available at the moment. The method described here above allows to approach the retrofit problem. The targeting identify if there is an opportunity for retrofitting the installation. It permits to propose the modifications which can improve the energy efficiency of the process. Once these modifications are done, the heat exchanger network must be modified to cope with the new energy target. The existing exchangers have to be used at best and the investment of new ones is to be avoided if possible in order to decrease the investment.

Two conditions are required to solve this problem:

1- Have the good idea.

2- Be able to test the validity of the idea.

Composite curves analysis can help to have the good idea. The application of the three targeting principle : "the more in- the more out", "no hot utility below the pinch point", "no cold utility above the pinch point" and "no heat across the pinch point", allows to identify the potentiality for energy recovery and to identify the exchanger transferring heat across the pinch point. Without going into the details of the method for the retrofit, we will feature a methodology proposed by Linnhoff (1987) to solve the heat exchanger network retrofit problem.

After solving the targeting phase and calculating the process modifications, the synthesis method for the retrofit proceeds in 4 steps:

1°) Identify exchanger transferring heat across the pinch point. The non vertical heat exchangers of figure 87 are misplaced.

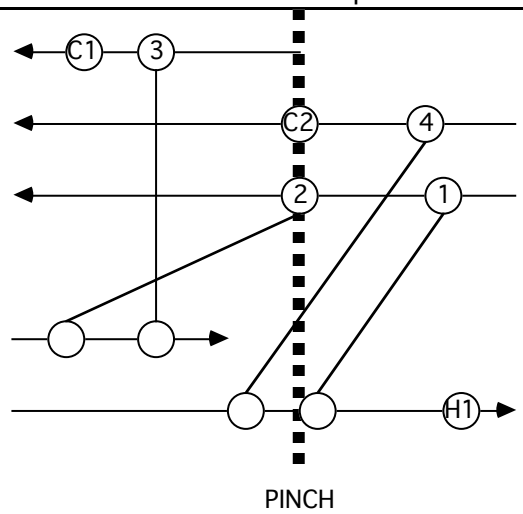

Figure 87. Misplaced heat exchangers.

2°) Eliminate these exchangers but remember of their position (tinted grey exchangers in figure 88).

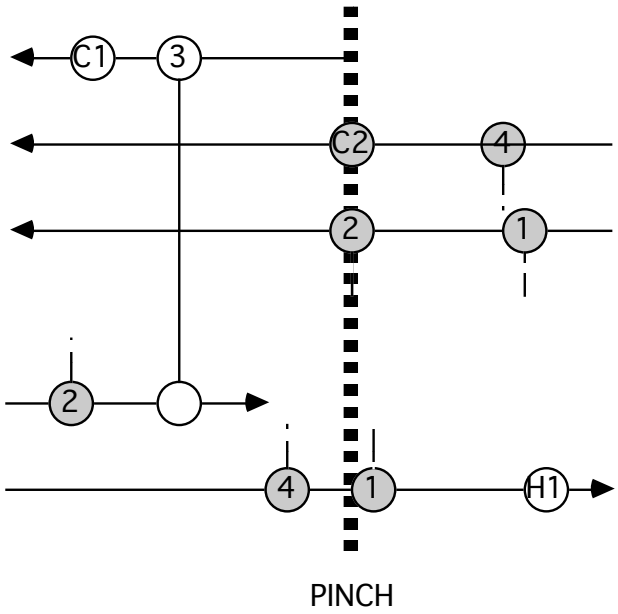

Figure 88. Suppress the misplaced heat exchangers.

3°) Using the pinch design method, complete the network by utilizing if possible the existing exchanger. The eliminated exchangers can be reused in an other place and if possible keep their place unless for one of the stream. The existing exchangers can be by passed to allow better exchange somewhere else.

4°) Try to restore the existing area to decrease the investment. The MER can be relaxed for this step so as heat can be send through the loops or through down stream path to reuse the existing heat exchangers.

The equation solver formulation for simulating and optimizing the heat exchanger network allows to analyse easily and precisely the impact of the decisions specially in the two last steps of the methodology proposed here above.

The cost function and the constraints will be adapted to the specific retrofit problem.

The simulation model of the heat exchangers takes into account fluid phase changes, flow dependent heat transfer coefficients and by pass calculations. The simulation must be sufficiently precise to simulate the existing heat exchanger performances. But it cannot be to complex in order to allow to the solver to find a solution. The simulation constraints a referred as F1(x,y)=0.

In the specification set, we will found not only the inlet and objective temperatures as well as the process streams flow rates, but also the area of the existing heat exchangers. The specifications are referred as F2(x,y)=0.

The general optimization problem is given by (39).

$$\min \text{Coût} = \sum_{i=1}^{nu} (yui\ C1ui + duiC2ui) + t \sum_{i=1}^{nen} (yei\ aei + bei(Ainew)cei) + t \sum_{j=1}^{neo} (yej\ aej + bej(dAjold)cej) \quad (44)$$

subject to

F1(x,y) = 0	balance and rating equations
F2(x,y) = 0	Spécification equations
G1(x,y) ≥ 0	Inequalities equations

y e {0,1} Integer variables representing the YES/NO decisions

where

yui:	integer variable associated to the use of the utility i;
dui:	Flow rate of the utility i;
C1ui, C2ui:	cost coefficients of the utility i;
t :	rate of return of the investment;
nen:	number of new heat exchangers in the network;
neo:	Actual number of heat exchanger in the network;
yei:	integer variable associated to the new heat exchanger i;
Ai:	Area of the new heat exchanger i;
aei, bei, cei :	cost coefficients for the new heat exchanger i;
yej:	integer variable associated to the area added to the existing heat exchanger j;
dAjold:	area added to the existing heat exchanger j;
aej, bej, cej :	costs coefficients for the area added to the heat exchanger j

The new constraints added for each the existing heat exchangers in the retrofit problem formulation are:

$$Ajn = Ajo + dAjold \quad (45.1)$$

$$Fj\ Ajn = Aeff \quad (45.2)$$

$$0 \le Fj \le 1 \quad (45.3)$$

where

Fj:	Area fraction used form the existing exchanger j;
Ajo:	Actual area of the existing exchanger j;
Ajn:	New area of the existing heat exchanger j
dAjold:	Area added to the heat exchanger j;
Aeff:	Effective area of the exchanger, calculated by the rating equation (46).

$$Aeff = \frac{Q}{UDTlm} \quad (46)$$

(46) can feature more complex form when fluid phase changes occur.

The problem described here above is a mixed integer non linear programming (MINLP) problem. Solving such a problem is very complex and requires decomposition methods. The mathematical aspect will not be described here.

As usually it corresponds to successive NLP problems, it is currently solved by successive NLP problem resolutions followed by a by hand analysis of the results and a new problem generation. In doing so the engineer can introduce his know-how and his feeling in the problem resolution and test the optimality using the different criteria previously defined. The solution will be selected among the most interesting solutions found.

Calcul d'un échangeur de chaleur: annexe

Objectifs

Etablir la formule de calcul simplifiée d'un échangeur de chaleur

Développement théorique

Considérons un échangeur contre courant, que nous assimilons tout d'abord à un échange double tube contre courant parfait et considéré comme parfaitement isolé par rapport à l'ambiance.

Le système figure 1, est composé de deux fluides un flux chaud (c) et un fluide froid (f) qui échangent de la chaleur à travers une paroi. Les fluides circulent à contre-courant.

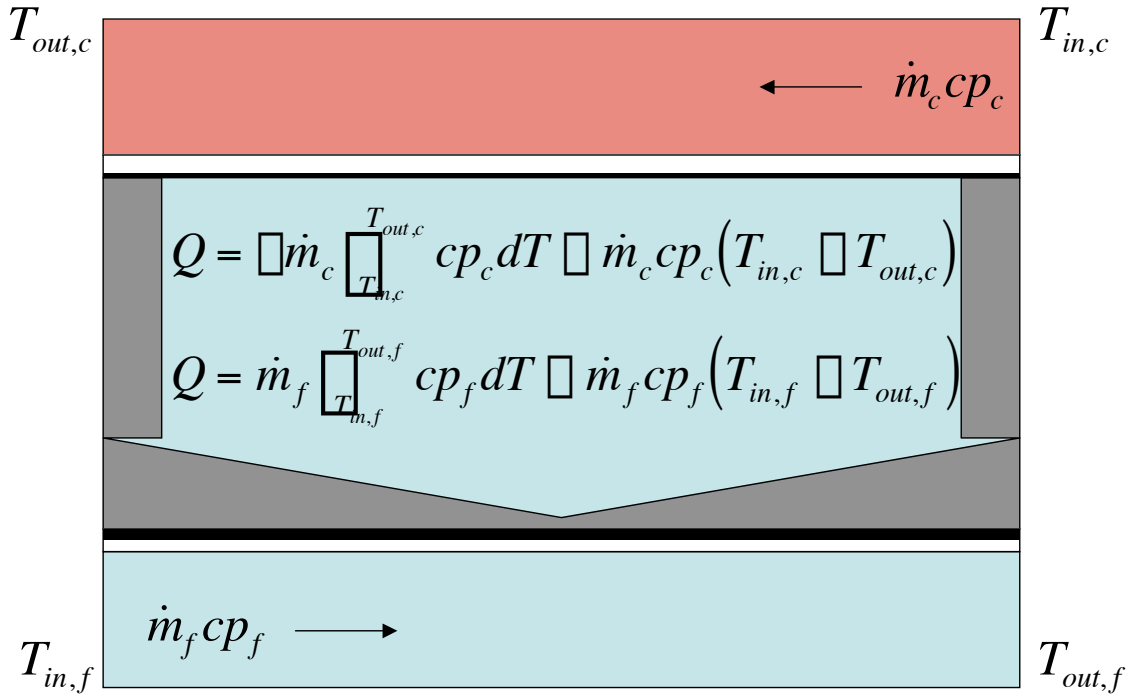

Figure 1 : le système considéré pour le calcul d'un échangeur de chaleur.

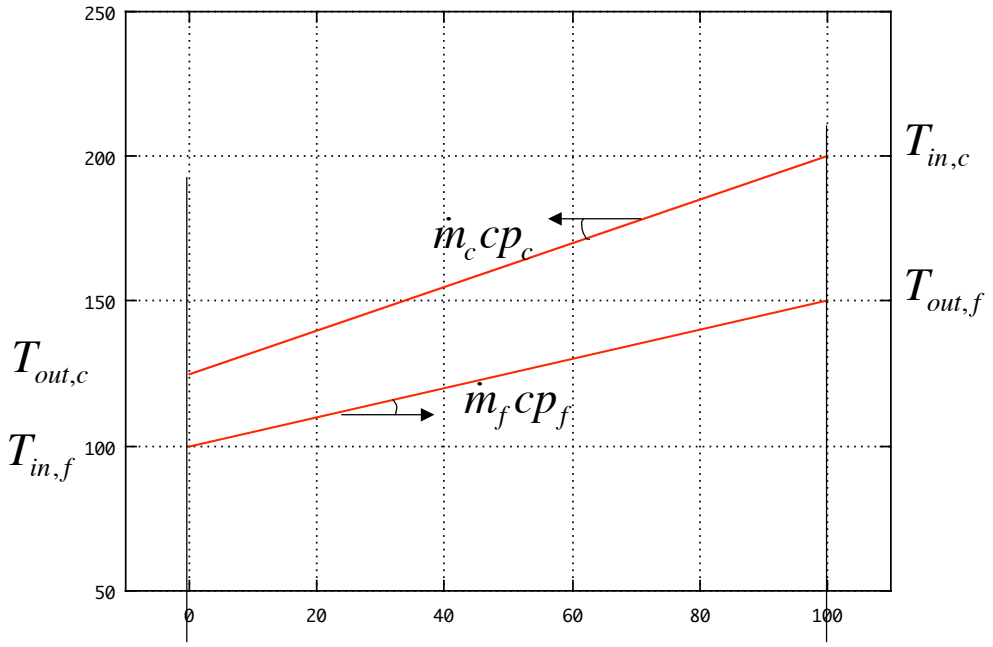

$$Q = -\dot{m}_c \int_{T_{in,c}}^{T_{out,c}} cp_c dT - \dot{m}_c cp_c \left(T_{in,c} - T_{out,c}\right)$$

$$Q = \dot{m}_f \int_{T_{in,f}}^{T_{out,f}} cp_f dT - \dot{m}_f cp_f \left(T_{in,f} - T_{out,f}\right)$$

Figure 2 : Diagramme température enthalpie d'un échangeur de chaleur contre courant.

Le profil de température peut-être assimilé à une droite si la chaleur spécifique du fluide peut être considérée comme indépendante de la température.

Pour une section infinitésimale de surface, nous pouvons calculer la quantité de chaleur dQ qui sera transférée à travers la paroi :

$$dQ = U\left(T_c - T_f\right)dA$$

Avec	U	Le coefficient de transfert de chaleur
	T_c	La température du fluide chaud supposée uniforme
	T_f	La température du fluide froid supposée uniforme
	dA	La surface de transfert de chaleur
	dQ	La quantité de chaleur tranférée depuis le fluide chaud vers le fluide froid

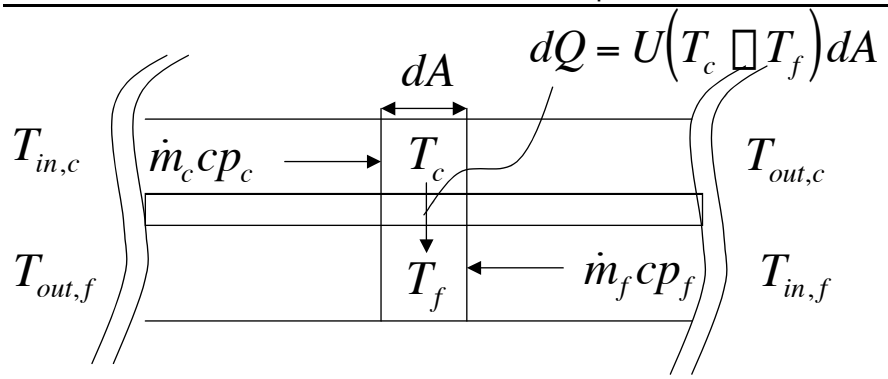

Figure 3 : représentation d'une section infinitésimale d'échangeur de chaleur contre courant.

Bilan de chaleur sur le fluide chaud :

$$dQ = \dot{m}_c cp_c dT_c \Rightarrow dT_c = \frac{dQ}{\dot{m}_c cp_c}$$

Bilan de chaleur sur le fluide froid :

$$dQ = \dot{m}_f cp_f dT_f \Rightarrow dT_f = \frac{dQ}{\dot{m}_f cp_f}$$

Evolution du potentiel de transfert dans l'échangeur

$$\Delta T = T_c - T_f$$

$$d\Delta T = d(T_c - T_f) = dQ\left(\frac{1}{\dot{m}_c cp_c} - \frac{1}{\dot{m}_f cp_f}\right)$$

donc :

$$dQ = K.d\Delta T$$

$$K = \left(\frac{1}{\dot{m}_c cp_c} - \frac{1}{\dot{m}_f cp_f}\right)$$

L'équation de transfert de chaleur se transforme donc en

$$dQ = U(T_c - T_f)dA \Rightarrow dA = \frac{Kd\Delta T}{U\Delta T}$$

$$et \qquad A = \int_0^l dA = \int_0^l \frac{Kd\Delta T}{U\Delta T}$$

Si U et K sont indépendants de la température

ou encore $\dot{m}_c cp_c$, $\dot{m}_f cp_f$ et U sont constant sur l'échangeur

on a :

$$A = \frac{K}{U}\int_0^l \frac{d\Delta T}{\Delta T} = \frac{K}{U}\left(\ln(\Delta T_l) - \ln(\Delta T_0)\right) = \frac{K}{U}\ln\left(\frac{T_{in,c} - T_{out,f}}{T_{out,c} - T_{in,f}}\right)$$

$$\dot{m}_c cp_c = \frac{Q}{(T_{in,c} - T_{out,c})} \text{ et } \dot{m}_f cp_f = \frac{Q}{(T_{out,f} - T_{in,f})}$$

$$donc \quad K = \left(\frac{1}{\dot{m}_c cp_c} - \frac{1}{\dot{m}_f cp_f}\right) = \frac{(T_{in,c} - T_{out,c}) - (T_{out,f} - T_{in,f})}{Q} = \frac{(T_{in,c} - T_{out,f}) - (T_{out,c} - T_{in,f})}{Q}$$

$$A = \frac{Q}{U(\Delta T_l - \Delta T_0)}\left(\ln\left(\frac{\Delta T_l}{\Delta T_0}\right)\right) \Rightarrow Q = UA\frac{(\Delta T_l - \Delta T_0)}{\ln\left(\frac{\Delta T_l}{\Delta T_0}\right)} = UA\Delta T_{lm}$$

$$et \qquad \Delta T_{lm} = \frac{(T_{in,c} - T_{out,f}) - (T_{out,c} - T_{in,f})}{\ln\frac{(T_{in,c} - T_{out,f})}{(T_{out,c} - T_{in,f})}}$$

Ce développement n'est bien sûr strictement valable que pour un échange contre courant parfait et pour des chaleurs spécifiques qui peuvent être assimilées à des constantes.

A retenir :

La charge de l'échangeur est proportionnelle à la surface l'échange,
Le coefficient de transfert global
La moyenne logarithmique du potentiel de transfert (différence de température entre le fluide chaude et le fluide froid)

Dans la pratique, les échangeurs industriels seront calculés par une approche similaire. La moyenne logarithmique de la différence de température sera corrigée pour tenir compte de l'altération du nombre de passes et de l'écoulement imparfait sur l'hypothèse de l'échange de chaleur contre courant. On se réfèrera aux manuels de transfert de chaleur pour plus détail concernant le dimensionnement des échangeurs de chaleur.

La résistance au transfert 1/U correspond à la somme de quatre résistances au transfert de chaleur :

1. la résistance dans le film du fluide chaude qui sera calculé par le coefficient de transfert de film h_c
2. la résistance due à la conduction de la chaleur à travers la parois. Cette résistance est calculée par e/□, e étant l'épaisseur de la paroi (longueur de conduction, □ la conductibilité thermique du matériaux utilisé dans l'échangeur.
3. la résistance au transfert du côté fluide froid qui sera représentée par le coefficient de transfert de film h_f
4. la résistance due à l'encrassement ou la détérioration de la paroi (figure 4)

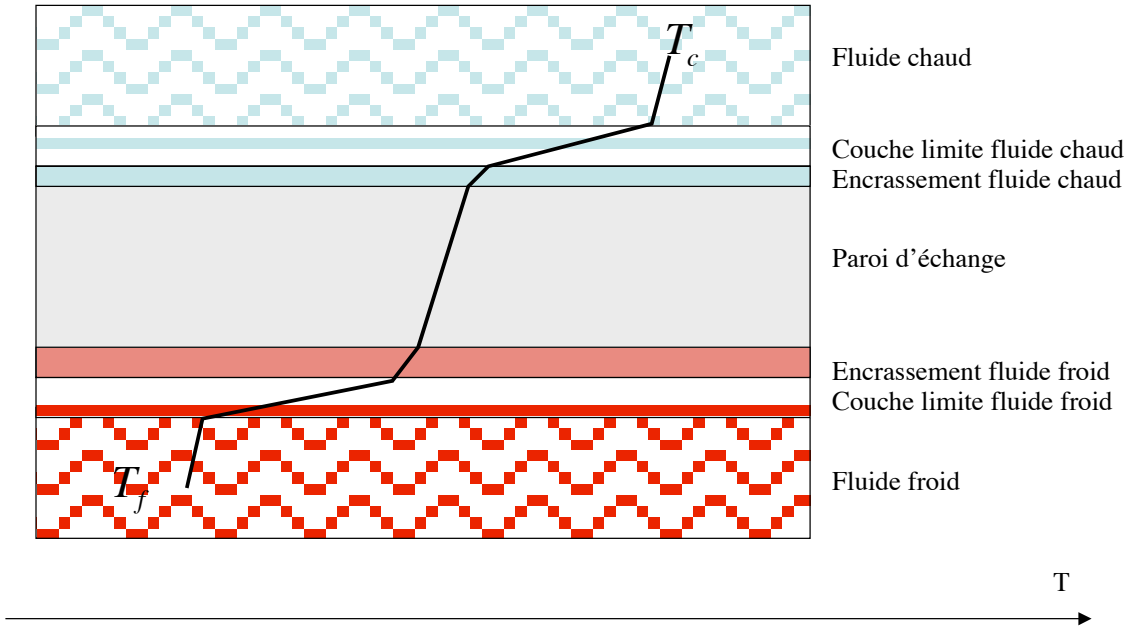

Figure 4 : le profil de température et les résistances au transfert de chaleur

Le coefficient de transfert de chaleur global sera calculé par :

$$\frac{1}{U} = \frac{1}{h_c} + \frac{e}{\square} + \frac{1}{h_f} + R$$

R est une résistance additionnelle au transfert de chaleur qui correspond à encrassement de l'échangeur.

Les coefficients de transfert de film seront estimés par des corrélations qui tiennent compte des propriétés thermodynamique des fluides, des conditions de fonctionnement : débit, état

thermodynamique, température et pression et de la géométrie de l'échangeur (configuration, vitesse d'écoulement, types de tubes, ...)

Pour les besoins des études d'intégration énergétique, il sera important de connaître une estimation acceptable permettant d'estimer la surface d'échange et donc le coût de l'échangeur. Il faudra donc pouvoir estimer les coefficients de transfert sans devoir calculer le détail de chaque résistance au transfert dans le détail. Nous utiliserons dés lors des valeurs courantes observées dans les échangeurs habituels. Ces valeurs peuvent être trouvées dans la littérature : chemical engineers' Handbook (1997), heat transfer handbook, turton et al. (1998), ...

A titre d'exemple la figure suivante présente les coefficients de transfert qui peuvent être considéré pour différents fluides connus.